IMPORTANT INSTALLATION NOTICE

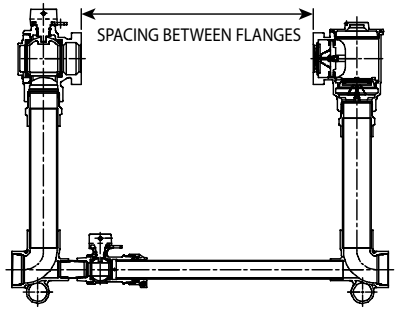

SPACING BETWEEN FLANGES

Prior to and during installation, verify flange-to-flange spacing required for meter and gaskets to ensure proper installation. Spacing may have been altered during shipment or installation.

Failure to assure proper meter spacing at installation will void factory warranty.

A. Y. McDonald packages these setters with a threaded rod idler for shipping purposes only. Loosen all hex nuts to remove idler from meter setter.

Setters are factory assembled wider than meter width to allow for gasket insertion.

To adjust this spacing, loosen compression nut on bypass and/or support tube and adjust as required.

IMPORTANT INSTALLATION NOTICE

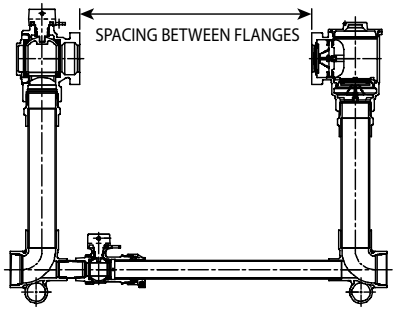

SPACING BETWEEN FLANGES

Prior to and during installation, verify flange-to-flange spacing required for meter and gaskets to ensure proper installation. Spacing may have been altered during shipment or installation.

Failure to assure proper meter spacing at installation will void factory warranty.

A. Y. McDonald packages these setters with a threaded rod idler for shipping purposes only. Loosen all hex nuts to remove idler from meter setter.

Setters are factory assembled wider than meter width to allow for gasket insertion.

To adjust this spacing, loosen compression nut on bypass and/or support tube and adjust as required.

800.292.2737 | sales@aymcdonald.com | aymcdonald.com 3210-535 Rev.A (3/22)

IMPORTANT INSTALLATION NOTICE

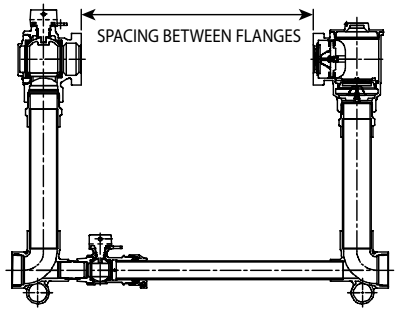

SPACING BETWEEN FLANGES

Prior to and during installation, verify flange-to-flange spacing required for meter and gaskets to ensure proper installation. Spacing may have been altered during shipment or installation.

Failure to assure proper meter spacing at installation will void factory warranty.

A. Y. McDonald packages these setters with a threaded rod idler for shipping purposes only. Loosen all hex nuts to remove idler from meter setter.

Setters are factory assembled wider than meter width to allow for gasket insertion.

To adjust this spacing, loosen compression nut on bypass and/or support tube and adjust as required.

800.292.2737 | sales@aymcdonald.com | aymcdonald.com 3210-535 Rev.A (3/22)

IMPORTANT INSTALLATION NOTICE

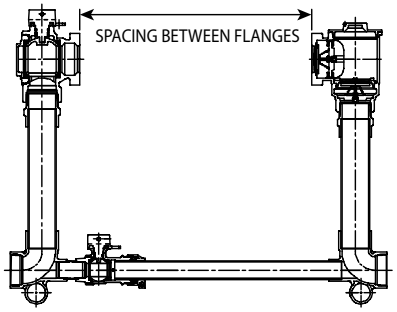

SPACING BETWEEN FLANGES

Prior to and during installation, verify flange-to-flange spacing required for meter and gaskets to ensure proper installation. Spacing may have been altered during shipment or installation.

Failure to assure proper meter spacing at installation will void factory warranty.

A. Y. McDonald packages these setters with a threaded rod idler for shipping purposes only. Loosen all hex nuts to remove idler from meter setter.

Setters are factory assembled wider than meter width to allow for gasket insertion.

To adjust this spacing, loosen compression nut on bypass and/or support tube and adjust as required.

800.292.2737 | sales@aymcdonald.com | aymcdonald.com 3210-535 Rev.A (3/22)

WARNING!

WARNING: It is unlawful in **CALIFORNIA & VERMONT (effective 1/1/2010); MARYLAND (effective 1/1/2012); LOUISIANA (effective 1/1/2013) and the UNITED STATES OF AMERICA (effective 1/4/2014)** to use any product in the installation or repair of any public water system or any plumbing in a facility or system that provides water for human consumption if the wetted surface area of the product has a weighted average lead content greater than 0.25%. This prohibition does not extend to service saddles used in California, Louisiana or under USA Public Law 111-380.

WARNING!

WARNING: It is unlawful in **CALIFORNIA & VERMONT (effective 1/1/2010); MARYLAND (effective 1/1/2012); LOUISIANA (effective 1/1/2013) and the UNITED STATES OF AMERICA (effective 1/4/2014)** to use any product in the installation or repair of any public water system or any plumbing in a facility or system that provides water for human consumption if the wetted surface area of the product has a weighted average lead content greater than 0.25%. This prohibition does not extend to service saddles used in California, Louisiana or under USA Public Law 111-380.

800.292.2737 | sales@aymcdonald.com | aymcdonald.com 3210-535 Rev.A (3/22)

WARNING!

WARNING: It is unlawful in **CALIFORNIA & VERMONT (effective 1/1/2010); MARYLAND (effective 1/1/2012); LOUISIANA (effective 1/1/2013) and the UNITED STATES OF AMERICA (effective 1/4/2014)** to use any product in the installation or repair of any public water system or any plumbing in a facility or system that provides water for human consumption if the wetted surface area of the product has a weighted average lead content greater than 0.25%. This prohibition does not extend to service saddles used in California, Louisiana or under USA Public Law 111-380.

800.292.2737 | sales@aymcdonald.com | aymcdonald.com 3210-535 Rev.A (3/22)

WARNING!

WARNING: It is unlawful in **CALIFORNIA & VERMONT (effective 1/1/2010); MARYLAND (effective 1/1/2012); LOUISIANA (effective 1/1/2013) and the UNITED STATES OF AMERICA (effective 1/4/2014)** to use any product in the installation or repair of any public water system or any plumbing in a facility or system that provides water for human consumption if the wetted surface area of the product has a weighted average lead content greater than 0.25%. This prohibition does not extend to service saddles used in California, Louisiana or under USA Public Law 111-380.

800.292.2737 | sales@aymcdonald.com | aymcdonald.com 3210-535 Rev.A (3/22)