SUBMITTAL DATA SHEET

DuraMAC™ Booster Pumps

Vertical Multistage Variable Speed Simplex Booster System

17140V020Y-3

The DuraMAC™ Boosting system is simple, versatile, sophisticated, and reliable. The Vertical Multistage Variable Speed Booster System changes motor speed based on demands of the system. Saving energy over tranitional constant speed booster systems.

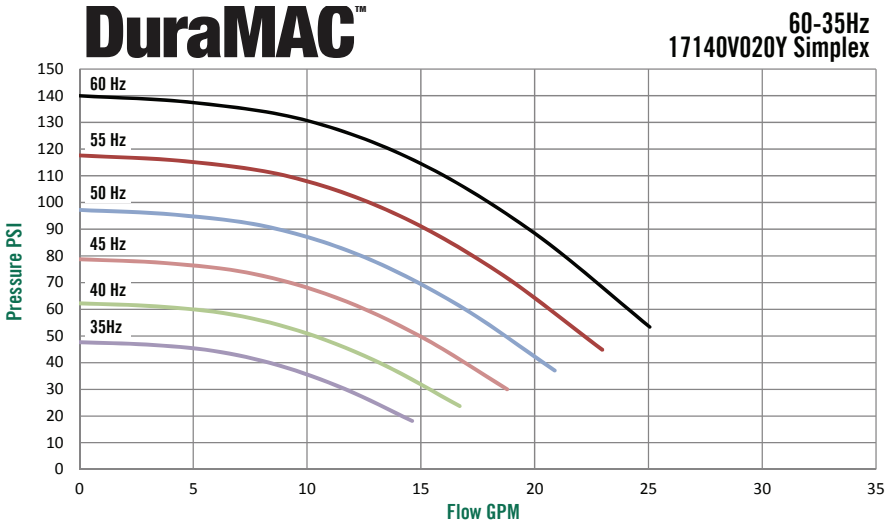

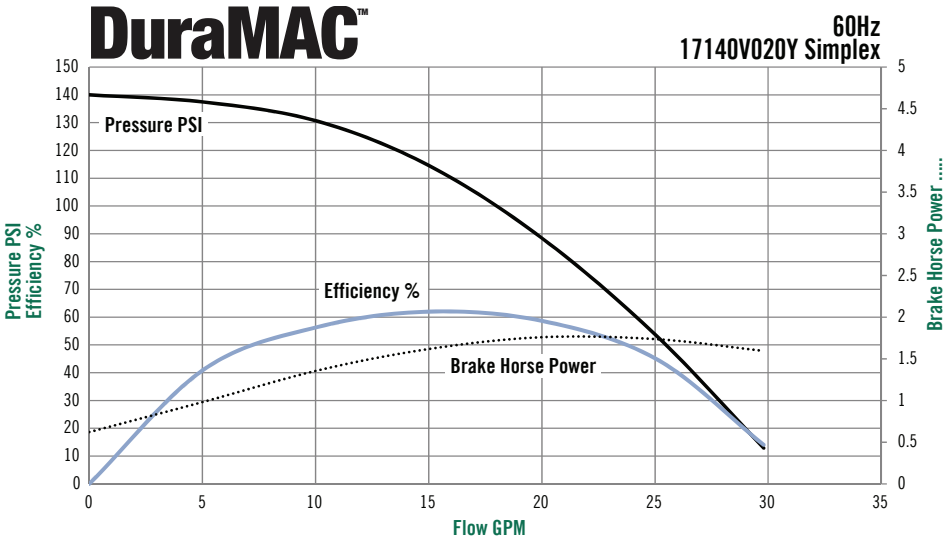

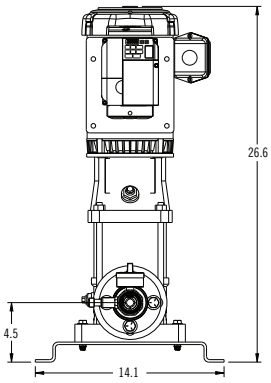

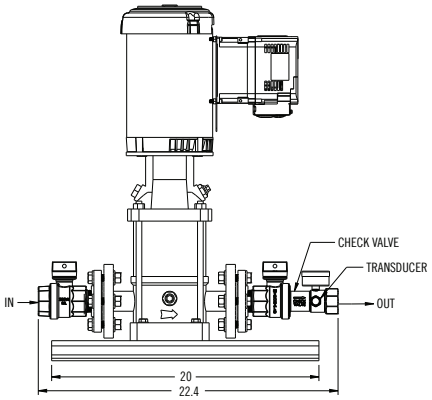

Technical Information

Model Number	17140V020Y-3
Max Flow	28 GPM
Max Boost	140 PSI
Discharge Transducer	0-150 PSI 4-20mA
Drive - Yaskawa V1000	NEMA 1
Suction Ball Valve	1 1/4" No-Lead Brass
Discharge Ball Valve	1 1/4" No-Lead Brass
Impeller	304 Stainless Steel
Pump End	304 Stainless Steel
Motor - NEMA Premium	TEFC 56C
Horsepower	2 HP
Seal Material	Carbon/Sic
Electrical	208-230V 3 Phase
Base	304 Stainless Steel
Tank Required	7.3 Gallon

NO-LEAD: The weighted average of the wetted surface of this no-lead product contacted by consumable water contains less than one quarter of one percent (0.25%) lead.

A.Y. McDonald Mfg. Co.
P.O. Box 508
Dubuque, IA 52004-0508

Toll Free: 1-800-292-2737
Fax: 1-800-832-9296
Hours: 7:00 a.m. - 5:00 p.m., CST

sales@aymcdonald.com
www.aymcdonald.com

A.Y. McDonald considers the information on this assembly drawing correct when published. Item and option availability, including specifications, are subject to change without notice.

Submitted by:

SUBMITTAL DATA SHEET

DuraMAC™ Booster Pumps
Vertical Multistage Variable Speed Simplex Booster System

17140V020Y-3

SIMPLEX BOOSTER SYSTEM

Furnish a Model **17140V020Y-3** Simplex variable speed, factory assembled water pressure booster system as manufactured by AY McDonald Mfg Co. The unit shall be rated for a system capacity of **20** GPM at a system pressure of **88** PSIG.

The motor must be UL Listed under UL 1004. In addition to the UL Listing for the motor the frequency drive must be separately listed under UL 508C.

FACTORY ASSEMBLY

The booster system shall be factory assembled on a stainless steel base including pumps, motors, and valves. All interconnecting piping and isolation valves shall be stainless steel, no lead brass and copper material. Provide wetted stainless steel flange connection on the suction and discharge of the pump. Provide no lead brass isolation ball valves on the suction and discharge of each pump. The valves shall be full-port ball valves. Provide one 2 1/2" liquid filled pressure gauge for indicating system discharge pressure.

PUMPS

System shall include **one** vertical multi-stage centrifugal pump(s) model **17140V020** with 1 1/4" flange connections. Pump casing, discharge, diffuser and impeller shall be made of stainless steel. Pump shall have a replaceable mechanical seal suitable for a working pressure of 230 PSIG. The mechanical seal shall be constructed of Nitrile Buna Rubber (NBR), Carbon and Silicon Carbide (SiC).

Pump shall be rated **20** GPM at **203** ft head.

MOTORS

Motors shall be **208-230** volt, three phase, 60 Hz totally enclosed fan cooled (TEFC). Motor shall be **2 HP**, 3520 RPM. Motors shall be selected so that they do not exceed name plate HP rating throughout the programmed sequence of pump operation.

CHECK VALVES

Each pump discharge will have a silent non-slam check valve sized for a maximum loss of 3 PSI at maximum flow and be suitable for the maximum working pressure of the system.

HYDRO-PNEUMATIC TANK

A hydro-pneumatic tank **(Sold Seperatly)** with a steel shell and a butyl diaphragm to separate the air and water is required for this system to work properly. Features shall include an air fill valve and bottom system connection suitable for 100% drawdown. The tank must be suitable for the maximum working pressure of the system, with a minimum volume of **7.3** gallons.

PUMP OPERATION

The pump shall run only as necessary to maintain system pressure and shall be controlled automatically by means of a pressure transducer and a variable frequency drive.

NO-LEAD: The weighted average of the wetted surface of this no-lead product contacted by consumable water contains less than one quarter of one percent (0.25%) lead.

EST. 1856 McDonald

A.Y. McDonald Mfg. Co.
P.O. Box 508
Dubuque, IA 52004-0508

Toll Free: 1-800-292-2737
Fax: 1-800-832-9296
Hours: 7:00 a.m. - 5:00 p.m., CST

sales@aymcdonald.com
www.aymcdonald.com

A.Y. McDonald considers the information on this assembly drawing correct when published. Item and option availability, including specifications, are subject to change without notice.

Submitted by: